DURA-CYL®

PREMIUM LIQUID CYLINDERS - CASTER BASE

The Dura-Cyl® Liquid Cylinder series is a premium transportable liquid cylinder for cryogenic service. The patented internal support system design and quality construction makes the Dura-Cyl series the most efficient yet rugged cylinder on the market today. Along with the patented Liquid Cylinder Control Manifold (LCCM) and our wide choice of caster base options, the Dura-Cyl series is also the most user-friendly cylinder available. Adding our industry-leading seven-year vacuum warranty and you get the lowest cost of ownership — making the Dura-Cyl cylinder the preferred choice in transportable liquid cylinders.

See Footring specification sheet (PN 14338395).

The Roto-Tel™ Liquid Level Gauge offers improved accuracy and expanded gauge ranges for better resolution.

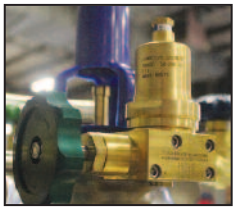

LCCM Models have an integral mounted combination pressure control regulator with an isolation valve.
(MP & HP models only)

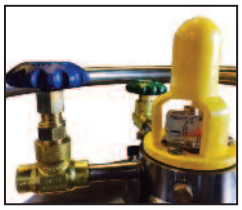

The Dura-Cyl LP models are now equipped with the Roto-Tel liquid level system. The liquid globe valve with an extended stem allows less ice build-up on the handle for easier operation.

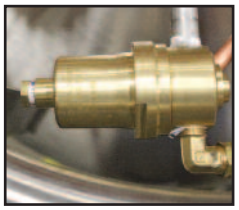

MCR Models have a combination pressure control regulator with an exclusive, calibrated micrometer adjusting screw.
(MP & HP models only)

Some models available with either round or square caster bases for safe and easy mobility.

Product Highlights

- Ideal for liquid nitrogen, oxygen, argon, CO_2 or nitrous oxide
- Different sizes, pressures, and features to meet your needs
- Stainless steel construction
- Thick, dent-resistant outer shell
- Patented durable, inner-vessel support system
- Large diameter handling ring with four supports
- Optional Micrometer Controlled Regulator (MCR) or Liquid Cylinder Control Manifold (LCCM)
- Roto-Tel™ Liquid Level Gauge System
- Seven-year vacuum warranty

CHART®

Innovation. Experience. Performance.

DURA-CYL®

PREMIUM LIQUID CYLINDERS - CASTER BASE

Caster Base Specifications

MODEL		120 L RB	230 L RB	230 L RB	230 L RB	230 L SB	230 L SB	230 L SB	265 L RB	265 L RB	265 L SB	265 L SB
	Pressure	LP	LP	MP	HP	LP	MP	HP	MP	HP	MP	HP
LCCM	Part Number	—	—	10602822	10616546	—	10496468	10496492	11076781	13070454	10510039	10512561
MCR	Part Number	—	—	10783635	10783651	—	10810779	10794027	10783678	10783694	11699267	10840169
None(1)	Part Number	10648396	10648599	—	—	10648556	—	—	—	—	—	—
CAPACITY(2)(3)												
Liquid (Gross)	(liters)	120	240	240	240	240	240	240	276	276	276	276
Liquid (Net)	(liters)	110	230	230	230	230	230	230	265	265	265	265
Gas (N_2)	ft^3 / Nm^3	—	—	5,024/132	4,734/124	—	5,024/132	4,734/124	5,769/152	5,438/143	5,769/152	5,438/143
Gas (O_2)	ft^3 / Nm^3	—	—	6,244/164	5,930/156	—	6,244/164	5,930/156	7,186/189	6,811/179	7,186/189	6,811/179
Gas (Ar)	ft^3 / Nm^3	—	—	6,073/160	5,763/151	—	6,073/160	5,763/151	6,982/183	6,634/174	6,982/183	6,634/174
Gas (CO_2)	ft^3 / Nm^3	—	—	—	4,614/121	—	—	4,614/121	—	5,305/139	—	5,305/139
Gas (N_2O)	ft^3 / Nm^3	—	—	—	4,378/115	—	—	4,378/115	—	5,034/132	—	5,034/132
PERFORMANCE												
NER (N_2)	% per day	2.0	1.5	1.8	1.8	1.5	1.8	1.8	2	2	2	2
NER (O_2 - Ar)	% per day	1.4	1.0	1.2	1.2	1.0	1.2	1.2	1.4	1.4	1.4	1.4
NER (CO_2 - N_2O)	% per day	—	—	—	0.5	—	—	0.5	—	0.5	—	0.5
Gas Flow (N_2, O_2, Ar)	SCFH/Nm^3/hr	—	—	400 / 10.5	400 / 10.5	—	400 / 10.5	400 / 10.5	400 / 10.5	400 / 10.5	400 / 10.5	400 / 10.5
Gas Flow (CO_2, N_2O)	SCFH/Nm^3/hr	—	—	—	110 / 2.9	—	—	110 / 2.9	—	110 / 2.9	—	110 / 2.9
DIMENSIONS & PRESSURE RATINGS												
Relief Valve Setting	psig / barg	22 / 1.5	22 / 1.5	230 / 16	350 / 24	22 / 1.5	230 / 16	350 / 24	230 / 16	350 / 24	230 / 16	350 / 24
DOT/TC Rating		4L100(4)	4L100	4L200	4L292	4L100	4L200	4L292	4L200	4L292	4L200	4L292
Diameter(5)	in / cm	20 / 50.8	26 / 66.0	26 / 66.0	26 / 66.0	26 / 66.0	26 / 66.0	26 / 66.0	26 / 66.0	26 / 66.0	26 / 66.0	26 / 66.0
Height(6)	in / cm	51/129.5	57.2/145.3	57.2/145.3	57.2/145.3	56.8/144.3	56.8/144.3	56.8/144.3	59.9/152.2	59.9/152.2	59.5/151.1	59.5/151.1
Tare Weight	lb / kg	177/80.3	296/134.3	311/141.1	367/166.5	325/147.4	340/154.2	395/179.2	330/149.7	390/176.9	360/163.3	418/189.6
Full Weight (N_2)	lb / kg	377/171	697/316.2	675/306.1	710/322	726/329.3	704/319.3	738/334.7	748/339.2	784/355.6	778/352.8	812/368.3
(O_2)	lb / kg	462/209.5	866/392.8	828/375.5	858/389.1	895/406	857/388.7	886/401.8	925/419.5	954/432.7	955/433.1	982/445.4
(Ar)	lb / kg	528/239.5	998/452.7	939/425.9	963/436.8	1027/465.8	968/439	991/449.5	1052/477.1	1076/488	1082/490.7	1104/500.7
(CO_2)	lb / kg	—	—	—	895/405.9	—	—	923/418.6	—	997/452.2	—	1025/464.9

(1) Pressure building regulator optional on LP models. (2) Gas capacities at DOT4L limits. See manual P/N 10642912 for details.
(3) Most of the Dura-Cyl models are available with permanently installed CGA fittings for medical applications. Contact Customer Service for details.
(4) Dura-Cyl 120LP is not TC approved. (5) Dimension of square caster bases: 27-3/4" W x 28-3/4" D. (6) Dimensions are measured from the floor to the top of the sight gauge protector.

RB = Round Base SB = Square Base
Note: All caster base models are available with stainless steel casters.
NER=Nominal Evaporation Rate

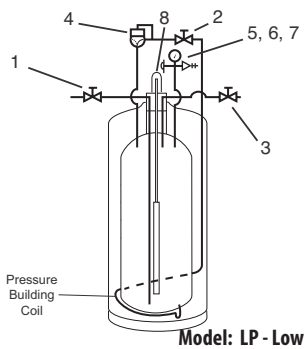

Nomenclature

1. Fill / Liquid Valve
2. Pressure Building Valve
3. Vent Valve
4. Pressure Building Regulator (optional)
5. Pressure Gauge
6. Pressure Relief Valve
7. Rupture Disk
8. Liquid Level Gauge

Model: LP - Low Pressure (Liquid Use Only)

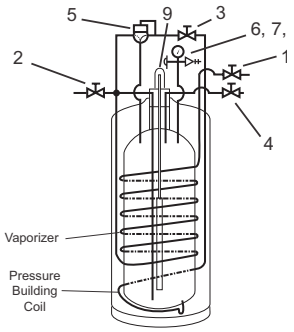

Nomenclature

1. Gas Use Valve
2. Fill / Liquid Valve
3. Pressure Building Valve
4. Vent Valve
5. Combination Pressure Building Regulator
6. Pressure Gauge
7. Pressure Relief Valve
8. Rupture Disk
9. Liquid Level Gauge

Model: MP & HP - Medium & High Pressure (Liquid or Gas Use)

Chart Inc.
U.S.: 1-800-400-4683
Worldwide: 1-952-758-4484

CHART®
Innovation. Experience. Performance.

© 2017 Chart Inc.
P/N 14336761
www.chartindustries.com